"APPROVED FOR RELEASE: 06/13/2000 CIA-RDP86-00513R000720810016-6

KARNKOWSKI, Piotr; CISEK, Boleslaw

Formation of petroleum and natural gas deposits in the Flysch of the Polish Carpathians and their foreland. Wiad naft 11 [i.e.9] no.2:25-27 F '63.

APPROVED FOR RELEASE: 06/13/2000 CIA-RDP86-00513R000720810016-6"

"APPROVED FOR RELEASE: 06/13/2000 CIA-RDP86-00513R000720810016-6

GLOWACKI, Eugeniusz; KARNKOWSKI, Piotr; ZAK, Czeslaw

Precambrian and Cambrian in the basement of the Central Carpathian piedmont and Gory Swietokrzyskie. Rocz geol Krakow 33 no.1/3:321-338 '63.

1. Geological Institute, Holy Cross Mts Branch, Kielce.

APPROVED FOR RELEASE: 06/13/2000 CIA-RDP86-00513R000720810016-6"

"APPROVED FOR RELEASE: 06/13/2000 CIA-RDP86-00513R000720810016-6

GLOWACKI, Eugeniusz; KARNKOWSKI, Piotr

Comparison of the Upper Precambrian (Riphean) of the Central Carpathian Foreland with a series of green schists of Dobruja. Kwartalnik geol 7 no.2:187-195 '63.

1. Panstwowe Przesiebiorstwo Poszukiwan Naftowych, Jaslo.

APPROVED FOR RELEASE: 06/13/2000 CIA-RDP86-00513R000720810016-6"

"APPROVED FOR RELEASE: 06/13/2000 CIA-RDP86-00513R000720810016-6

HORN, Tomasz; KARNKOWSKI, Piotr

Forecast for prospecting the petroleum and natural gas deposits in the Polish Lowland. Wiad naft 10 no.2: 36-38 F'64.

APPROVED FOR RELEASE: 06/13/2000 CIA-RDP86-00513R000720810016-6"

"APPROVED FOR RELEASE: 06/13/2000 CIA-RDP86-00513R000720810016-6

KARNKOWSKI, Piotr, mgr

Types of crude petroleum accumulation in the Carpathian Mountains. Nafta Pol 20 no. 1: 8-13 Ja '64.

1. Zjednoczenie Przemyslu Naftowego, Warszawa.

APPROVED FOR RELEASE: 06/13/2000 CIA-RDP86-00513R000720810016-6"

"APPROVED FOR RELEASE: 06/13/2000 CIA-RDP86-00513R000720810016-6

KARNKOWSKI, Piotr

Remarks on the geologic structure of the Flysch of the eastern part of the Polish Carpathians according to deep borings. Rocz geol Krakow 33 no. 4:457-470 '63.

1. Enterprise of Petroleum Prospecting, Jaslo.

APPROVED FOR RELEASE: 06/13/2000 CIA-RDP86-00513R000720810016-6"

"APPROVED FOR RELEASE: 06/13/2000 CIA-RDP86-00513R000720810016-6

KARNKOWSKI, Piotr

Geological importance of fossils. Wiad naft 7 no.7/8:145-147 Jl-Ag '61.

(Fossils) (Geology)

APPROVED FOR RELEASE: 06/13/2000 CIA-RDP86-00513R000720810016-6"

"APPROVED FOR RELEASE: 06/13/2000 CIA-RDP86-00513R000720810016-6

L 33002-65 EWT(1)/EWT(m)/EWG(m)/EWP(b)/FSS-2/EWP(t) IJP(c) JD
ACCESSION NR: AP5007365 S/0286/65/000/004/0026/0026

AUTHOR: Rushchuk, V. I.; Smerdov, I. A.; Yezerets, M. A.; Karnobatskiy, E. K.; Peller, V. V.; Shul'ga, F. F.

TITLE: A method for producing cupric silicate contact filler paste. Class 12, No. 168292

SOURCE: Byulleten' izobreteniy i tovarnykh znakov, no. 4, 1965, 26

TOPIC TAGS: storage battery, filler paste, grid plug, silicate

ABSTRACT: This Author's Certificate introduces a method for producing cupric silicate contact filler paste by intensive cooling of the melt. The activity of the paste is improved by allowing the melt to flow over water-cooled rotating shafts, thus cooling it from 1650 to 852°C.

ASSOCIATION: none

SUBMITTED: 19Jul63 ENCL: 00 SUB CODE: EE, IC

NO REF SOV: 000 OTHER: 000

Card 1/1

APPROVED FOR RELEASE: 06/13/2000 CIA-RDP86-00513R000720810016-6"

"APPROVED FOR RELEASE: 06/13/2000 CIA-RDP86-00513R000720810016-6

KARNOBED, A., arkhitektor

Location of residential construction in cities. Zhil. stroi. no.6: 21-23 '63. (MIRA 16:10)

APPROVED FOR RELEASE: 06/13/2000 CIA-RDP86-00513R000720810016-6"

"APPROVED FOR RELEASE: 06/13/2000 CIA-RDP86-00513R000720810016-6

S/035/62/000/010/086/128
A001/A101

AUTHORS: Karnold, Jaromir, Pukl, Miroslav

TITLE: Practical works with a tellurometer

PERIODICAL: Referativnyy zhurnal, Astronomiya i Geodeziya, no. 10, 1962, 13 - 14, abstract 10G68 ("Geod. a kartogr. obzor", 1961, v. 7, no. 12, 221 - 225, Czech)

TEXT: A tellurometer was applied in 1960 - 1961 for determining positions of control points in a 1:10,000 survey and of interspace points of a fundamental network in the Srednecheshskaya Oblast' of Czechoslovakia. The order of measurements was as follows. A theodolite was installed in point A (see figure) of the geodetic network, and in point B, separated from A by 1 - 2 m, a tellurometer (key station). A right angle R was formed with the theodolite, and section BB'=e was measured with a rod provided with centimeter divisions, which permitted the calculation of distance B'-1=D=D'+e, where D'=B-1. Two versions of work organization were investigated. In the first one, reconnaissance was conducted during one day prior to the measurement

Card 1/5

APPROVED FOR RELEASE: 06/13/2000 CIA-RDP86-00513R000720810016-6"

"APPROVED FOR RELEASE: 06/13/2000 CIA-RDP86-00513R000720810016-6

beginning; it was found out which control points can be determined from each of the available points of the geodetic network (interspace network points). Simultaneously the sequence of measurements was established and the plan of transfer from one point to another point was compiled. In carrying out measurements, the observer located at a point being determined (drift station) established radio telephone communication with the key station and fixed control points, pinning them up on an aerial photograph. In the time during which the tellurometer was warmed, the observer in the key station measured angles and determined quantities necessary for calculation of refraction index. Then he took reading on an indicator device, after which the drift station was transported to the next point being determined. Determination of one point lasted ~50 min. The second version of work organization consisted in that all control points on the locality were marked preliminarily with stakes; such a detailed reconnaissance of locality, corresponding to one sheet of a map with 50 - 60 control points, lasted 3 - 4 days. However, measurements for determination of one point were carried out in 20 - 30 min. A drawback of the second version is necessity of staying twice at the points.

Card 2/5

APPROVED FOR RELEASE: 06/13/2000 CIA-RDP86-00513R000720810016-6"

"APPROVED FOR RELEASE: 06/13/2000 CIA-RDP86-00513R000720810016-6

S/035/62/000/010/086/128
A001/A101

Practical works with a tellurometer

Determination of control points by means of a tellurometer is advantageous in forestless countries or with small quantities of forests, where points of the geodetic network are located on commanding heights. Angular measurements were conducted with a Theo 10 theodolite by aiming at the antenna of the drift station, its reflector being painted in red-white color. In cases when an antenna was invisible, aiming was carried out at the center of a special shield, 1 x 1 m size, lifted 5.5 m over the point being determined. At least three carrier frequencies were used for reading on the tellurometer. Errors in determining the plan and height positions of control points proved to be ~ 10 cm. As practice has shown, a team of two technicians and two workers, provided with a cross-country vehicle and using a tellurometer determined during one month control points within the limits of three sheets of a 1:10,000 map. On February 13 - 17, 1961, 30 sides of a survey network were measured with a tellurometer, whose point positions were determined earlier in compiling topographic maps. Lengths of network sides varied from 4.6 to 2.3 km. Almost all sides were crossed by electric transmission lines. Absolute divergences between side lengths calculated by coordinates and measured with the tellurometer were distributed as follows: less than 5 cm in 11 sides, 5 - 10 cm in 11 sides, 11 - 20 cm in 4,

Card 3/5

APPROVED FOR RELEASE: 06/13/2000 CIA-RDP86-00513R000720810016-6"

"APPROVED FOR RELEASE: 06/13/2000 CIA-RDP86-00513R000720810016-6

Practical works with a tellurometer

and more than 20 cm in 4 sides. Relative divergences were in the range from 1:1,800 to 1:57,000. Causes of large divergences were local obstacles and indistinct scale on the oscilloscope. The analysis of error sources in measuring distances with the tellurometer leads to these conclusions. To determine distances with an error not exceeding 5 cm, one can use the mean value of radio wave refraction index, calculated from its values determined once a month during conduct of measurements. Measuring distances with a maximum error of 1 cm calls for the knowledge of refraction index at each point. A comparison of mean times of covering the measured distance by electromagnetic waves, obtained from readings at 12 and 3 carrier frequencies, has shown that these values differ by only 0.25 mμ/sec; this corresponds to a divergence in measured length equal to 3.8 cm. Therefore, in determining the position of control points it is sufficient to restrict oneself to measuring the propagation time of electromagnetic waves at three carrier frequencies only. Unfavorable effect on tellurometer readings of broadcasting and radar stations with similar frequencies is noted, as well as the presence of massive metal objects near the stations. It is very important, in measuring the sides of a survey network with a tellurometer, that the key and drift stations were arranged at the same inclination

Card 4/5

APPROVED FOR RELEASE: 06/13/2000 CIA-RDP86-00513R000720810016-6"

"APPROVED FOR RELEASE: 06/13/2000 CIA-RDP86-00513R000720810016-6

Practical works with a tellurometer

angle to the line being measured. In conclusion the authors point out that application of tellurometers for determining control points in 1:10,000 topographic surveys has been completely justified. As to expediency of determination of points of an interspace network, this problem should be decided on the basis of the analysis of precision of results obtained.

N.Modrinskiy

[Abstracter's note: Complete translation]

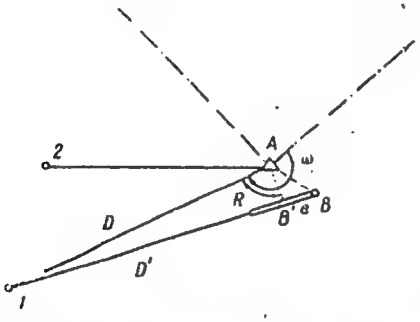

Card 5/5

APPROVED FOR RELEASE: 06/13/2000 CIA-RDP86-00513R000720810016-6"

"APPROVED FOR RELEASE: 06/13/2000 CIA-RDP86-00513R000720810016-6

DELONG, Borivoj, inz. C.Sc.; KARNOLD, Jaromir, inz.

Technical and economic evaluation of tellurometric measurement of control points. Geod kart obzor 8 no.10:188-192 O '62.

1. Vyzkumny ustav geodeticky, topograficky a kartograficky, Praha (for Delong). 2. Ustredni sprava geodezie a kartografie, Praha (for Karnold).

APPROVED FOR RELEASE: 06/13/2000 CIA-RDP86-00513R000720810016-6"

"APPROVED FOR RELEASE: 06/13/2000 CIA-RDP86-00513R000720810016-6

KARNOLD, Maromir, inz.; PUKL, Miroslav, inz.

Operations with tellurometer. Geod kart obzor 7 no.12:221-225 D '61.

1. Ustav geodezie a kartografie, Praha.

(Geodesy) (Area measurement)

APPROVED FOR RELEASE: 06/13/2000 CIA-RDP86-00513R000720810016-6"

"APPROVED FOR RELEASE: 06/13/2000 CIA-RDP86-00513R000720810016-6

KARNOV, A. N

621.396.81.029.55 : 523.78 3395

Change of Radio Signal Strength during Solar Eclipse 30th June 1954.—A. N. Karnov. (*Priroda, Moscow*, May 1955, No. 5, p. 113.) The signal strength of the 25-m-λ transmission from Moscow received at Stalingrad decreased during the eclipse down to a minimum 48 db below normal about 10 minutes after the maximum occultation. The curve shown is slightly skew, the rate of change of signal strength being greater after the minimum than before it. The signal strength was estimated by comparing the a.f. output of the receiver with the a.f. output of a calibrated signal generator.

62

APPROVED FOR RELEASE: 06/13/2000 CIA-RDP86-00513R000720810016-6"

"APPROVED FOR RELEASE: 06/13/2000 CIA-RDP86-00513R000720810016-6

KARNOV, A. N.

USSR/Electricity - Lightning

Card 1/1 Pub. 86 - 28/37

Authors : Karnov, A. N., Cand. Phys. Math. Sc.

Title : Drifting lightning

Periodical : Priroda 44/4, 116 - 117, Apr 1955

Abstract : An account is given of the observation of successive impulses of a lighting discharge, which followed the path of discharge but were dislocated laterally by the wind. Photographs of the phenomenon were taken. This occurred in June near the Volga river after a long drought. Illustration.

Institution : .....

Submitted : .....

APPROVED FOR RELEASE: 06/13/2000 CIA-RDP86-00513R000720810016-6"

"APPROVED FOR RELEASE: 06/13/2000 CIA-RDP86-00513R000720810016-6

117-58-6-28/36

AUTHORS: Karnov, M.Ya., Vlasov, V.I., Engineers

TITLE: Precision Volume Punching by the Vibration Method (Tochnaya ob"yemnaya shtampovka vibratsionnym metodom)

PERIODICAL: Mashinostroitel', 1958, Nr 6, pp 41-42 (USSR)

ABSTRACT: The article contains the results of an experiment on the volume punching of blades from AK6 and VD17 alloys on the vibration press shown in fig. 1. The vibrator is installed in the upper part of the press. The press works with a frequency of 1,000-1,300 beats per min. and an amplitude of 15 mm. The blades manufactured on the press (Figure 2) were made from VD17 alloy. The dies were heated to 410°C by means of a special induction device (Figure 3). During the second punching and the hot calibration, the forged pieces remained cold and the dies hot. After each deformation process the thickness of the blade was measured in the center of the profile. The results are given in table 1. The vibrations in each operation lasted for 5 sec. i.e. 80-85 blows. For checking the quality of the blades metallographic tests were made. The places on the blades where the samples were taken, are shown in figure 4.

APPROVED FOR RELEASE: 06/13/2000 CIA-RDP86-00513R000720810016-6"

"APPROVED FOR RELEASE: 06/13/2000 CIA-RDP86-00513R000720810016-6

The results of the tests are given in table 2. For the hot calibration of the forged pieces of steel blades an insertion die (Figure 5) is used. The tests have shown that the vibration method may be used for the production of blades from V.17 aluminum alloy with an allowance for polishing; and for the production of steel specimens with a thickness of 0.9 mm, with a surface of not more than 10 cm^2, and a total convexity in the center of 0.09-0.12 mm. There are 5 figures and 2 tables.

AVAILABLE: Library of Congress

Card 2/2

1. Punch press-Vibration methods

APPROVED FOR RELEASE: 06/13/2000 CIA-RDP86-00513R000720810016-6"

"APPROVED FOR RELEASE: 06/13/2000 CIA-RDP86-00513R000720810016-6

129-58-7-8/17

AUTHORS: Shestakov, S. N. and Karnov, M. Ya, Engineers

TITLE: Structure and Properties of Alloys After Vibrational Deformation (Struktura i svoystva splavov posle vibratsionnogo deformirovaniya)

PERIODICAL: Metallovedeniye i Obrabotka Metallov, 1958 Nr 7 pp 35-38 (USSR)

ABSTRACT: Problems in the changes of the structure and properties of metals after deformation by the vibration method have so far not been studied. For elucidating the features of this type of deformation parallel investigations were made involving deformation on a vibro-press, hydraulic press and a mechanical stamping press of the aluminium alloys AK6, VD-17 and steel 40KhNMA. The macro and the micro-structures were investigated determining the hardness, the grain size and the real deformation along the height of the specimen. The blank was heated to the forging temperature or was placed in the cold state into the die and was preliminarily deformed by applying a static force of 10 to 100 tons and, following that, the vibrator was put into operation. The vibro-impact deformation was effected with a frequency up to 1250 i...ts

Card 1/3

APPROVED FOR RELEASE: 06/13/2000 CIA-RDP86-00513R000720810016-6"

"APPROVED FOR RELEASE: 06/13/2000 CIA-RDP86-00513R000720810016-6

per minute of amplitudes of 1 to 25 mm. During each of these impacts only a very small degree of deformation takes place (small fractions of a millimetre) and the deformation speeds are lower than those obtained in other forging-pressing machinery. In the investigations specimens were used with diameters of 25 and 50 mm and heights of 10 to 25 mm. The following were investigated: hardness distribution along the surface and in the interior of the specimens using the vibro-process as well as that of deformation processes (Figs. 1 and 2); the macro-structure; the micro-structure and the grain size after recrystallisation annealing; the real degree of deformation, the structure of the rims produced by the upsetting.
The following conclusions are arrived at:
1) The vibration method of deformation produces a more uniform macro and micro-structure and a finer grain structure of the alloys after recrystallisation annealing. Accordingly, the hardness in the case of vibro-upsetting is also more uniformly distributed.
2) It was established that the vibration method of deformation reduces the required specific deformation pressures.

APPROVED FOR RELEASE: 06/13/2000 CIA-RDP86-00513R000720810016-6"

"APPROVED FOR RELEASE: 06/13/2000 CIA-RDP86-00513R000720810016-6

Structure and Properties of Alloys After Vibrational Deformation

3) The here mentioned relations may be due to a decrease of the values of contact friction during vibro-deformation and they may also be due to the way in which the loads are applied.
There are 7 figures.

Card 3/3

APPROVED FOR RELEASE: 06/13/2000 CIA-RDP86-00513R000720810016-6"

"APPROVED FOR RELEASE: 06/13/2000 CIA-RDP86-00513R000720810016-6

SOV/129-59-1-14/17

AUTHORS: Karnov, M.Ya. and Shestakov, S.N., Engineers

TITLE: Vibrational Deformation of Aluminium Alloys (Vibratsionnoye deformirovaniye alyuminiyevykh splavov)

PERIODICAL: Metallovedeniye i Termicheskaya Obrabotka Metallov, 1959, Nr 1, pp 57 - 60 (USSR)

ABSTRACT: During deformation of the aluminium alloy AK6 in the cold state by means of a vibration press-hammer, the authors found that the ductility of specimens of 50 mm dia and 10 mm height, with a fibre in the perpendicular direction, was always higher than if the same specimens were in the heated state; the difference in the amount of upsetting exceeded 10 - 15%. For elucidating this phenomenon and also for the purpose of establishing optimum deformation regimes of such specimens on a vibropress-hammer, special investigations were carried out which are described in this paper. The specimens were swaged in the cold (as delivered, i.e. hot-pressed) and in the hot state and the influence was investigated of the heating temperature of the specimens and of the inserts on the ductility of the alloy. The vibration frequency was varied between 950 and 1350 c.p.min; with increasing frequency, the degree of deformation

Card1/3

APPROVED FOR RELEASE: 06/13/2000 CIA-RDP86-00513R000720810016-6"

"APPROVED FOR RELEASE: 06/13/2000 CIA-RDP86-00513R000720810016-6

Vibrational Deformation of Aluminium Alloys

increased. The deformation time was varied between 1 and 15 sec. The hardness was determined on the surface of the specimen. Furthermore, the macro- and the microstructures were studied. The deformation temperatures were measured by means of contact thermocouples which were sunk into the specimens to a depth of 10 mm; during the process of deformation, the temperature was automatically recorded. The results are graphed and tabulated and the following conclusions are arrived at:
1) during upsetting on a vibro-press, the deformation temperature of the specimen is determined by the heating temperature of the inserts; if the inserts are hot, the deformation proceeds in the hot state even if the specimen is not preliminarily heated; if the inserts are cold or only slightly heated, the deformation of specimens, even if heated, will take place under differing conditions, varying between conditions approaching the hot state and conditions approaching the cold state.
2) During upsetting between cold or slightly heated inserts of alloys which are prone to thermal hardening, the heating temperature of the specimen should be near

APPROVED FOR RELEASE: 06/13/2000 CIA-RDP86-00513R000720810016-6"

"APPROVED FOR RELEASE: 06/13/2000 CIA-RDP86-00513R000720810016-6

Vibrational Deformation of Aluminium Alloys

to the annealing temperature. 3) The highest ductility and the greatest tendency to fill the moulds is obtained in the case of upsetting of cold specimens using hot inserts. Thereby, the optimum heating temperature of the inserts in the case of deformation of the alloy, AK6, is 300 - 400 °C.
There are 5 figures, 1 table and 2 Soviet references.

APPROVED FOR RELEASE: 06/13/2000 CIA-RDP86-00513R000720810016-6"

"APPROVED FOR RELEASE: 06/13/2000 CIA-RDP86-00513R000720810016-6

84629

S/182/60/000/003/001/007
A161/A029

1.1200

AUTHORS: Karnov, M.Ya.; Voronin, A.A.

TITLE: Vibrational Deformation Method

PERIODICAL: Kuznechno-shtampovochnoye proizvodstvo, 1960, No. 3, pp. 3 - 8

TEXT: Experiments have been carried out at a (not named) plant laboratory with a hydraulic 100-ton experimental press (Fig. 1) with vibrating vertical plunger. The press produces an alternating force of up to 350 tons; the maximum oscillations frequency of the oscillator connected mechanically to the press plunger is 1,500/min; the oscillations amplitude is adjustable from fractions of 1 mm to 25 mm. Specimen material was 40XHMA (40KhNMA) steel, aluminum alloys AK-6 (AK-6) and ВД-17 (VD-17); and the titanium alloy BT-2 (VT-2). Deformations and forces were measured by an especially built electro-dynamometric system (Fig. 2) with resistance wire pickups. Detailed description of the experimental technique, press design and measuring system is included. For comparison, experiments were carried out also on a 1,000-ton coining press. As seen in curves (Fig. 5), the plasticity of the titanium alloy increased in vibrational stamping with different temperature. Cold stamped VD-17 alloy had a 30 - 40% higher plas-

Card 1/2

APPROVED FOR RELEASE: 06/13/2000 CIA-RDP86-00513R000720810016-6"

"APPROVED FOR RELEASE: 06/13/2000 CIA-RDP86-00513R000720810016-6

Vibrational Deformation Method

ticity, titanium alloy VT-2 stamped with vibration, hot or cold, had 25% more than after deformation with the coining press, and twice as high as after drop forging. A photo (Fig. 6) shows macrostructure of the AK-6 alloy after deformation on a nonvibrating (a) and the vibrational (b) press. The most homogeneous and fine structure was obtained in specimens swaged on the vibrational press with the use of a lubricant. The method will be used for mass-production. It has the following advantages: 1) More uniform deformation of metal. 2) Up to 60% lower friction on contact surfaces. 3) Up to 40% higher plasticity obtained in light and titanium alloys and structural steel. 4) Work pressure is 1.5 - 2 times lower, and this increases the die life and reduces the required power. 5) The accuracy of work is considerably higher. Blanks (blades) from VD-17 alloy were obtained with +0.05 mm allowance for polishing, and with better surface finish than is possible with mechanical stamping and coining presses. Engineers V.I. Vlasov, B.I. Petrov, A.P. Rogachevskiy, V.A. Filatov (deceased), M.S. Sotskiy and S.N. Shestakov took part in the experiments. There are 8 figures.

APPROVED FOR RELEASE: 06/13/2000 CIA-RDP86-00513R000720810016-6"

"APPROVED FOR RELEASE: 06/13/2000 CIA-RDP86-00513R000720810016-6

S/122/60/000/010/008/015
A161/A030

AUTHORS: Karnov,M.Ya., and Podval'nyy,S.P., Engineers

TITLE: Machines Studied with a High-Speed Movie Camera

PERIODICAL: Vestnik mashinostroyeniya, 1960, No.10, pp.44-46

TEXT: The motion of the vibrator rod on a vibration press has been studied. The kinematic system of this press (with a mechanical vibrator) is shown (fig.1). The vibrator (Fig.2) worked with 900-1200 vibrations a minute, with rod amplitude of 4-12 mm; the test specimens were cylindrical, from 40 ХНМА (40KhNMA) steel and "AK6" aluminum alloy; the specimens were not heated; the СКС-1 (SKS-1) 16-mm camera made 150 to 4000 frames/sec. The camera was placed on a platform suspended on a crane hook to prevent vibrating. The rod speed at the moment of contact with the specimen or die was measured with a paper mark with traced parallel lines. Space between lines served as a measurement scale for real rod travel; real shooting frequency was measured with a МН-7 (MN-7) floodlight giving 100 flashes per second at 50 cycles A.C. Light from it was cast on the film through a lens system so that only the film edges were exposed. The pictures were analysed with 15x micro-

Card 1/4

APPROVED FOR RELEASE: 06/13/2000 CIA-RDP86-00513R000720810016-6"

"APPROVED FOR RELEASE: 06/13/2000 CIA-RDP86-00513R000720810016-6

S/122/60/000/010/008/015
A161/A030

Machines Studied with a High-Speed Movie Camera

scope. Rod speed epures were plotted. The initial speed dropped abruptly to 0.28-0.19 m/sec in thousandths of a second, rose after 0.012 sec during 0.003 sec slightly again dropped again and smoothly reached zero; in the final stage of deformation, after 0.025 sec, the process seems to be stabilized; then the rod abruptly rises with 0.45 m/sec, and slows down to reach the 0 point. The analysis of the epures proved that the calculated rod speeds were too high, and the real variations of the rod speed were different from those calculated, particularly in the deformation period and during the transition period to idle run. There are 5 figures.

Card 2/4

APPROVED FOR RELEASE: 06/13/2000 CIA-RDP86-00513R000720810016-6"

"APPROVED FOR RELEASE: 06/13/2000 CIA-RDP86-00513R000720810016-6

S/122/60/000/010/008/015
A161/A030

Machines Studied with a High-Speed Movie Camera

Fig.1: Kinematic system of vibropress with mechanical vibrator

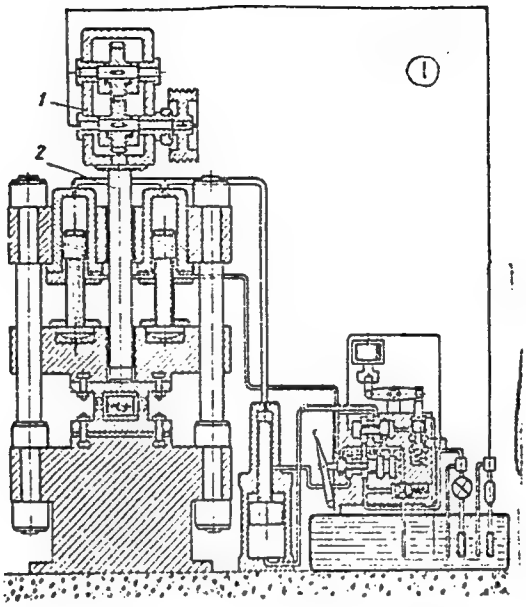

Card 3/4

APPROVED FOR RELEASE: 06/13/2000 CIA-RDP86-00513R000720810016-6"

"APPROVED FOR RELEASE: 06/13/2000 CIA-RDP86-00513R000720810016-6

Machines Studied with a High-Speed Movie Camera

S/122/60/000/010/008/015
A161/A030

Fig.2: Mechanical vibrator and its working scheme

a - debalancing weights

b - working position

c - neutral position

d - upper position

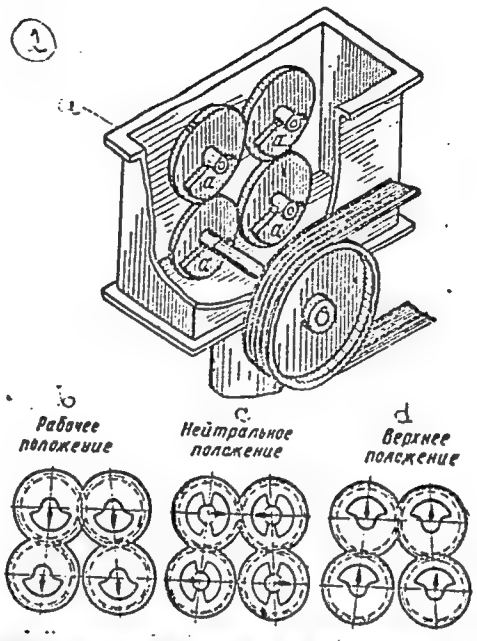

Card 4/4

APPROVED FOR RELEASE: 06/13/2000 CIA-RDP86-00513R000720810016-6"

"APPROVED FOR RELEASE: 06/13/2000 CIA-RDP86-00513R000720810016-6

KARNOV, M.Ya., inzh.; PODVAL'NYY, S.P., inzh.

Using high-speed motion-picture photography in investigating machine tools. Vest.mash. 40 no.10:44-46 O'60. (MIRA 13:10)
(Machine tools--Testing) (Motion pictures in industry)

APPROVED FOR RELEASE: 06/13/2000 CIA-RDP86-00513R000720810016-6"

"APPROVED FOR RELEASE: 06/13/2000 CIA-RDP86-00513R000720810016-6

26535
S/182/61/000/003/004/009
A161/A133

11200 also 1413, 1454, 1446

AUTHOR: Karnov, M. Ya.

TITLE: Some problems of vibrational metal deforming with limited widening

PERIODICAL: Kuznechno-shtampovochnoye proizvodstvo, no. 3, 1961, 16 - 18

TEXT: Specimens of АК-6 (AK-6) and ВД-17 (VD-17) aluminum alloys and medium alloyed structural 40ХНМА (40KhNMA) steel were pressed in a special split die at room temperature under static and vibrational deformation forces. The plasticity was rated by the maximum main deformation (height reduction) at which failure occurred. The special equipment to measure the effective force P and the deformation and the vibration press design had been described in two former publications referred to [Ref. 1: A. A. Voronin, M. Ya. Karnov, Apparatura dlya issledovaniya dinamiki protsessov kovki i shtampovki (Equipment for the investigation of dynamics of the forging and stamping processes), filial VINITI, 1958; Ref. 2: P. D. Lavrent'ev, B. I. Petrov, A. P. Pozachevskiy and V. S. Goncharov, Konstruktsiya i printsip deystviya vibropressa (Design and operation principles of the vibration press), filial VINITI, 1958]. The vibration amplitude was varied from a fraction of one millimeter to 11 mm, and frequency attained 1,045 oscillations/min. The

Card 1/2

APPROVED FOR RELEASE: 06/13/2000 CIA-RDP86-00513R000720810016-6"

"APPROVED FOR RELEASE: 06/13/2000 CIA-RDP86-00513R000720810016-6

Some problems of vibrational metal deforming with...

pressure required in pressing with vibration was 28% lower than under static tests for AK-6 aluminum and 25% lower for steel at 30% upsetting. The difference in the pressure required for different metal increased with the growing degree of deformation. The macrostructure of AK-6 alloy specimens was more uniform after pressing with vibration than after static pressing. The difference is explained by alternating maximum and minimum contact friction under vibration, and asymmetrical flow of metal. No traces of rupture were seen on the surface after 90 - 95% deformation. Deformed 40KhNMA and VD-17 alloy metal had an analogous macrostructure. The surface and corss-section hardness of all specimens was in general lower and more uniform after pressing with vibration than without, while the mechanical properties were more uniform and not inferior to specimens upset on hydraulic presses. There are 4 figures, 2 tables, and 2 Soviet-bloc references.

Card 2/2

APPROVED FOR RELEASE: 06/13/2000 CIA-RDP86-00513R000720810016-6"

"APPROVED FOR RELEASE: 06/13/2000 CIA-RDP86-00513R000720810016-6

KARNOV, M. Ya.

Determining deformations under the effect of vibration loading. Kuz.-shtam. proizv. 3 no.6:21-23 Je '61. (MIRA 14:6)
(Deformations (Mechanics))
(Forging machinery)

APPROVED FOR RELEASE: 06/13/2000 CIA-RDP86-00513R000720810016-6"

"APPROVED FOR RELEASE: 06/13/2000 CIA-RDP86-00513R000720810016-6

KARNOV, M.Ya.; PODVALNYY, S.P.

Analyzing the kinematic characteristics of a vibratory press by means of high-speed motion-picture photography. Usp.nauch. fot. 9:285-286 '64.

(MIRA 18:11)

APPROVED FOR RELEASE: 06/13/2000 CIA-RDP86-00513R000720810016-6"

"APPROVED FOR RELEASE: 06/13/2000 CIA-RDP86-00513R000720810016-6

L 32616-66 EWT(d)/EWT(m)/EWP(w)/EWP(v)/T/EWP(t)/ETI/EWP(k)/EWP(h)/EWP(l)
ACC NR: AP6012235 IJP(c) JD/HW SOURCE CODE: UR/0129/66/000/004/0022/0026

AUTHOR: Karnov, M. Ya.; Shchennikova, A. Ye.

ORG: none

TITLE: Effect of the vibration method of plastic deformation on the structure of metals

SOURCE: Metallovedeniye i termicheskaya obrabotka metallov, no 4, 1966, pp 22-26

TOPIC TAGS: steel, aluminum alloy, vibration stress, static pressure, cold forging/40KhNMA steel, VD17 aluminum alloy

ABSTRACT: The authors investigated the fine crystalline structure, residual microstresses and microhardness of 40KhNMA steel and VD17 aluminum alloy in specimens subjected to the static and vibration methods of plastic deformation (cold upsetting), with the object of selecting the most rational die-forging technique. The stressed state of the specimens was determined with the aid of an MF-4 photometer, and the crystal lattice distortions, by means of a radiographic examination. Findings: the width of the X-ray lines increases with increasing degree of deformation, but the experimental points for the specimens cold-upset by the vibration method lie below the points for the specimens cold-upset by the static method; this indicates that

Card 1/2 UDC: 539.433:620.18

APPROVED FOR RELEASE: 06/13/2000 CIA-RDP86-00513R000720810016-6"

"APPROVED FOR RELEASE: 06/13/2000 CIA-RDP86-00513R000720810016-6

L 32616-66
ACC NR: AP6012235

1

the replacement of the static loading method with the vibration loading method during the plastic deformation of specimens reduces the extent of crystal lattice distortions for the materials investigated. Moreover, in the vibration-loaded specimens microdistortions and microstresses are more uniformly distributed than in the statically loaded specimens. The vibration method of die forging is much more effective than the static-loading method, and it also has the following additional advantages: technological plasticity increases to 50%, unit pressure during deformation is 35% lower, dimensional precision increases 1.5-2 times, and the durability of press tools increases 5-8 times. Orig. art. has: 6 figures, 2 tables.

18

SUB CODE: 11, 13 SUBM DATE: none/ ORIG REF: 004/ OTH REF: 001

Card 2/2

APPROVED FOR RELEASE: 06/13/2000 CIA-RDP86-00513R000720810016-6"

"APPROVED FOR RELEASE: 06/13/2000 CIA-RDP86-00513R000720810016-6

KARNOVA G. V.

AUTHORS: Korshak, V. V., Kolubev, V. V., Karnova, G. V. 62-1-15/29

TITLE: Heterochain Polyesters (O geterotsepnykh poliefirakh)
Report 6: The Mixed Polyesters of the Ethylene Glycol and Two Dicarboxylic Acids (Soobshcheniye . Smeshannyye poliefiry etilenglikolya i dvukh dikarbonovykh kislot)

PERIODICAL: Izvestiya AN SSSR Otdeleniye Khimicheskikh Nauk, 1958, Nr 1, pp. 88-95 (USSR)

ABSTRACT: Karozers and Dorai (reference 1) were the first to obtain a mixed polyester. This mixed polyester differed in its properties from the obtained alloy of the polyethylene succinate and polyethylene sebacynate. Greater attention was paid to the research of mixed aromatic-aliphatic poly-esters. A short description of the investigation results in the above mentioned field of Edgar, Izard and Griehl (references 3,4,5,6) follows. In the experiment carried out by the authors of this paper the polycondensation of bifunctional compounds was used in order to obtain mixed poly-esters. Di-β-hydroxyethylene esters of the dicarboxylic acids were used as initial products.
The following was reported by the authors on the obtained results: The properties of the mixed poly-esters with which the authors

Card 1/3

APPROVED FOR RELEASE: 06/13/2000 CIA-RDP86-00513R000720810016-6"

"APPROVED FOR RELEASE: 06/13/2000 CIA-RDP86-00513R000720810016-6

deal in the present paper vary to a great extent according to the composition of the initial component. Some poly-esters are solid elastic products, some are brittle. Others are soft or viscous glutinous liquids. In all systems poly esters can be found with a minimum melting temperature which is obtained by the interaction of the terephtalic -and aliphatic acid (10:90, 20:80, or 30:70 mol.%). (Figure 1-6). The same rules, as within every system, can be observed with respect to the minimum temperatures (see table 7). The minimum temperatures drop from 37 to -18°, and then rise again up to +1°. The solubility of the mixed poly-esters in solvents (link benzene and cyclohexanone) is determined by the content of terephtalic acid (see table 8a). Dicomponent poly esters with a content of terephtalic acid of more than 50, 60% resp. are not soluble, under 50% they are soluble in certain solvent (tables 1-8). The properties of the mixed poly-esters depend on the correlation of the initial components. Therefore it was interesting to observe how these correlations in the reaction process are conserved. For this purpose an elementary analysis of the poly esters for various interactions was carried out. The results of this analysis are to be seen in table 9. As

APPROVED FOR RELEASE: 06/13/2000 CIA-RDP86-00513R000720810016-6"

"APPROVED FOR RELEASE: 06/13/2000 CIA-RDP86-00513R000720810016-6

Heterochain Polyesters 62-1-15/29
Report 6: The Mixed Polyesters of the Ethylene Glycol and Two Dicarboxylic Acids.

we see, the computed composition corresponds to a great extent to that obtained onthe strength of the experiment. There are 6 figures, 9 tables, and 7 references, 1 of which is Slavic.

ASSOCIATION: Institute of Elemental-Organic Compounds, AS USSR (Institut elementoorganicheskikh soyedineniy Akademiii nauk SSSR)

SUBMITTED: August 4, 1956

AVAILABLE: Library of Congress

1. Mixed polyesters-Chemical analysis 2. Ethylene glycol-Chemical reactions 3. Dicarboxylic acids-Chemical reactions

Card 3/3

APPROVED FOR RELEASE: 06/13/2000 CIA-RDP86-00513R000720810016-6"

"APPROVED FOR RELEASE: 06/13/2000 CIA-RDP86-00513R000720810016-6

KARNOVAN, N.I.

"The collective of the telecommunication center is improving the quality of its work." Vest. sviazi 24 no.5:26-27 My '64. (MIRA 17:6)

1. Nachal'nik Kirovogradskogo gorodskogo uzla svyazi.

APPROVED FOR RELEASE: 06/13/2000 CIA-RDP86-00513R000720810016-6"

"APPROVED FOR RELEASE: 06/13/2000 CIA-RDP86-00513R000720810016-6

GUBENKO, Ye., dotsent, kand. tekhn.nauk; KARNOVSKIY, A., dotsent, kand. tekhn. nauk; YAKOVLEV, B., dotsent, kand. tekhn. nauk

Reviews and bibliography. Vest. TSNII MPS 24 no.5:63 '65. (MIRA 18:9)

1. Dnepropetrovskiy institut inzhenerov zheleznodorozhnogo transporta.

APPROVED FOR RELEASE: 06/13/2000 CIA-RDP86-00513R000720810016-6"

"APPROVED FOR RELEASE: 06/13/2000 CIA-RDP86-00513R000720810016-6

[illegible]

[illegible] Yu.A., prof. [illegible]; MZYUK, V.I., kand. tekhn. nauk; [illegible] Yu.A., kandidat tekhnicheskikh nauk; [illegible], kandidat tekhnicheskikh nauk; [illegible], kandidat tekhnicheskikh nauk; [illegible],

"APPROVED FOR RELEASE: 06/13/2000 CIA-RDP86-00513R000720810016-6

KARNOVSKIY A. I.

DZYURA, A.M., kand.tekhn.nauk; KARNOVSKIY, A.I., kand.tekhn.nauk

Standard practice on the route between the Donets Basin and the Krivoi Rog Basin. Zhel. dor. transp. 40 no.3:8-14 Mr '58. (MIRA 11:4)

(Ukraine--Railroads--Mangement)

APPROVED FOR RELEASE: 06/13/2000 CIA-RDP86-00513R000720810016-6"

"APPROVED FOR RELEASE: 06/13/2000 CIA-RDP86-00513R000720810016-6

KARNOVSKIY, A.I., kand. tekhn. nauk (Dnepropetrovsk)

How to co-ordinate graphic train sheets and locomotives turnover.
Zhel. dor. transp. 41 no.5:25-29 My '59. (MIRA 12:7)
(Railroads--Traffic)

APPROVED FOR RELEASE: 06/13/2000 CIA-RDP86-00513R000720810016-6"

"APPROVED FOR RELEASE: 06/13/2000 CIA-RDP86-00513R000720810016-6

KARNOVSKIY, A.I., kand. tekhn. nauk dots.

Determining the optimal utilization of the traffic capacity of single-track lines (with steam traction). Trudy DIIT no.28: 112-118 '59. (MIRA 13:2)
(Railroads--Traffic)

APPROVED FOR RELEASE: 06/13/2000 CIA-RDP86-00513R000720810016-6"

"APPROVED FOR RELEASE: 06/13/2000 CIA-RDP86-00513R000720810016-6

DADOCHKIN, G.V., inzh. (Dnepropetrovsk); DZYURA, A.M., kand.tekhn.nauk (Dnepropetrovsk); KARNOVSKIY, A.L., kand.tekhn.nauk (Dnepropetrovsk)

New developments in the dispatcher control of local operations; experience of dispatcher V. I. Karpa. Zhel.dor.transp. 44 no.1:63-68 Ja '62. (MIRA 14:12)

1. Nachal'nik Dnepropetrovskogo otdeleniya Pridneprovskoy dorogi (for Dadochkin).
(Railroads—Train dispatching)

APPROVED FOR RELEASE: 06/13/2000 CIA-RDP86-00513R000720810016-6"

"APPROVED FOR RELEASE: 06/13/2000 CIA-RDP86-00513R000720810016-6

KARNOVSKIY, A.I., kand.tekhn.nauk

Calculating the traffic capacity of railroads. Vest.TSNII MPS 21 no.6:50-51 '62. (MIRA 15:9)

1. Dnepropetrovskiy institut inzhenerov zheleznodorozhnogo transporta.

(Railroads--Traffic)

APPROVED FOR RELEASE: 06/13/2000 CIA-RDP86-00513R000720810016-6"

"APPROVED FOR RELEASE: 06/13/2000 CIA-RDP86-00513R000720810016-6

BERNGARD, K.A., prof., doktor tekhn.nauk; VOROB'YEV, N.A., kand.tekhn.nauk; KANDELINSKIY, A.M., inzh. (Dnepropetrovsk); KARNOVSKIY, A.I., kand.tekhn.nauk (Dnepropetrovsk); NIKULIN, I.I., kand.tekhn.nauk; (Dnepropetrovsk)

"Organization of railroad traffic" by I.G.Tikhomirov, V.A. Buianov, A.V.Vinnichenko. Reviewed by K.A.Berngard and others. Zhel.dor.transp. 44 no.8:94-96 Ag '62. (MIRA 15:8)

1. Zamestitel' nachal'nika Pridneprovskoy dorogi (for Kandelinskiy).
(Railroads—Traffic) (Tikhomirov, I.G.)
(Buianov, V.A.) (Vinnichenko, A.V.)

APPROVED FOR RELEASE: 06/13/2000 CIA-RDP86-00513R000720810016-6"

"APPROVED FOR RELEASE: 06/13/2000 CIA-RDP86-00513R000720810016-6

KARNOVSKIY, A.I., kand. tekhn. nauk, dotsent

Effect of the passenger train speed on the traffic capacity of single-track railroads. Trudy DIIT no.43 5-15 '63.
(MIRA 17:11)

APPROVED FOR RELEASE: 06/13/2000 CIA-RDP86-00513R000720810016-6"

"APPROVED FOR RELEASE: 06/13/2000 CIA-RDP86-00513R000720810016-6

KARNOVSKIY, A.I., kand. tekhn. nauk (Dnepropetrovsk); KULAYEV, K.V. (Dnepropetrovsk); REYTBLAT, A.Ya., inzh. (Dnepropetrovsk)

Potentials for reducing the idle time of locomotives. Zhel. dor. transp. 46 no.5:71-73 My '64. (MIRA 18:2)

1. Glavnyy inzh. Pridneprovskoy dorogi (for Kulayev).

APPROVED FOR RELEASE: 06/13/2000 CIA-RDP86-00513R000720810016-6"

"APPROVED FOR RELEASE: 06/13/2000 CIA-RDP86-00513R000720810016-6

KARNOVSKIY, A.I., dotsent (Dnepropetrovsk); PEYTBLAT, A. Ya. (Dnepropetrovsk)

Improved plan for making up trains. Zhel. dor. transp. 47 no. 11: 30-33 N '65 (MIRA 19:1)

1. Dnepropetrovskiy institut inzhenerov zheleznodorozhnogo transporta (for Karnovskiy). 2. Glavnyy inzh. sluzhby dvizheniya Pridneprovskoy dorogi (for Reytblat).

APPROVED FOR RELEASE: 06/13/2000 CIA-RDP86-00513R000720810016-6"

"APPROVED FOR RELEASE: 06/13/2000 CIA-RDP86-00513R000720810016-6

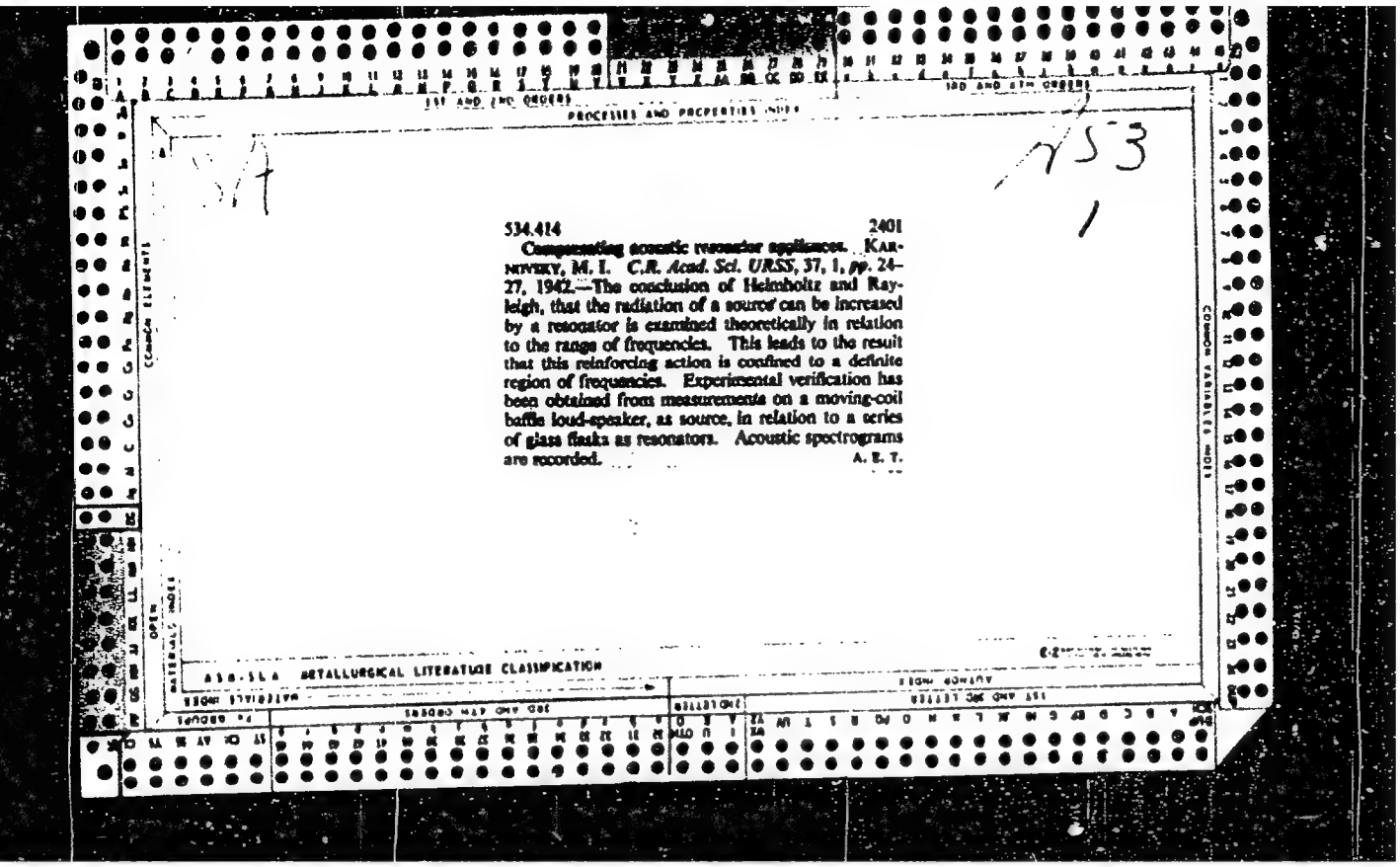

534.414 2401

Compensating acoustic resonator appliances. KARNOVSKY, M. I. *C.R. Acad. Sci. URSS*, 37, 1, *pp.* 24–27, 1942.—The conclusion of Helmholtz and Rayleigh, that the radiation of a source can be increased by a resonator is examined theoretically in relation to the range of frequencies. This leads to the result that this reinforcing action is confined to a definite region of frequencies. Experimental verification has been obtained from measurements on a moving-coil baffle loud-speaker, as source, in relation to a series of glass flasks as resonators. Acoustic spectrograms are recorded. A. E. T.

APPROVED FOR RELEASE: 06/13/2000 CIA-RDP86-00513R000720810016-6"

"APPROVED FOR RELEASE: 06/13/2000 CIA-RDP86-00513R000720810016-6

KARNOVSKIY, [illegible] I.

Karnovskiy, [illegible] I. "On the [illegible]", Sbornik tr[illegible] Kiyevsk. In-ta kinoinzhenerov, Issue 1, 1948, p. [illegible], - Biblio : [illegible] ite[illegible]s.

So: [illegible], 10 April [illegible], (Letopis' Kurnal'nykh Statey, [illegible], [illegible]

APPROVED FOR RELEASE: 06/13/2000 CIA-RDP86-00513R000720810016-6"

"APPROVED FOR RELEASE: 06/13/2000 CIA-RDP86-00513R000720810016-6

[illegible], [illegible]

[illegible], M. [illegible] [illegible], V. [illegible]. "An automatic apparatus for observing the frequency characteristics of amplifiers", Sbornik [illegible] [illegible]. [illegible], [illegible], [illegible], p. [illegible].

[illegible]: [illegible], [illegible], Letopis 'Zhurnal 'nykh Statey, No. [illegible], [illegible].

APPROVED FOR RELEASE: 06/13/2000 CIA-RDP86-00513R000720810016-6"

"APPROVED FOR RELEASE: 06/13/2000 CIA-RDP86-00513R000720810016-6

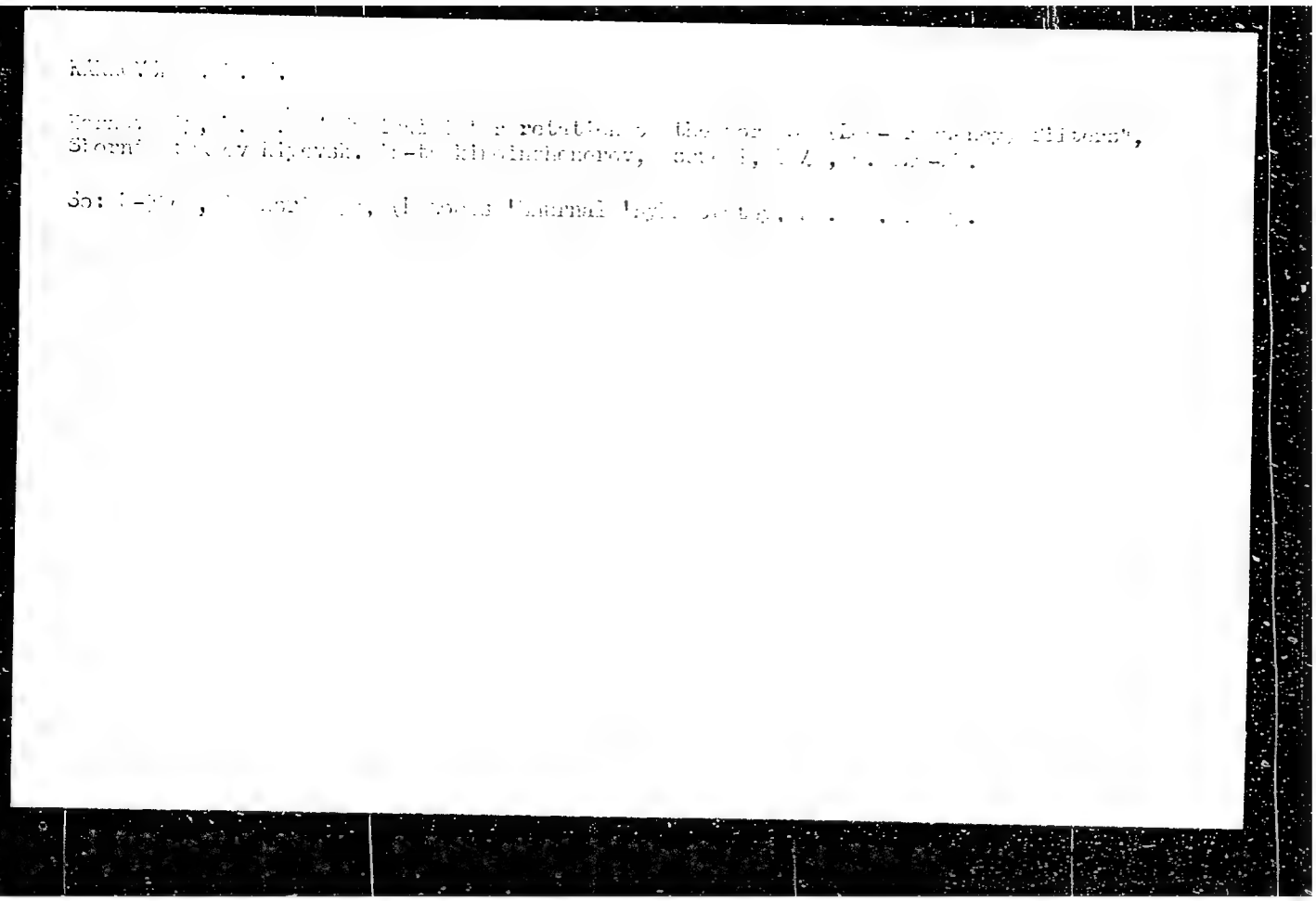

APPROVED FOR RELEASE: 06/13/2000 CIA-RDP86-00513R000720810016-6"

"APPROVED FOR RELEASE: 06/13/2000 CIA-RDP86-00513R000720810016-6

KARNOVSKIY, M. I.

Karnovskiy, M. I. [illegible] 'Grubhal', Ye. M. "[illegible] tus for the observation of acoustic processes by means of water waves", Sbornik trudov Kiyevsk. [illegible] Issue 1, [illegible], [illegible].

So: [illegible] 61, [illegible] April [illegible], (Letopis 'Zhurnal'nykh Statey, [illegible], [illegible]).

APPROVED FOR RELEASE: 06/13/2000 CIA-RDP86-00513R000720810016-6"

"APPROVED FOR RELEASE: 06/13/2000 CIA-RDP86-00513R000720810016-6

KARNOVSKIY, [illegible] I.

Karnovskiy, [illegible] I. [illegible] "[illegible]" (On the calculation of the field S sound), Sbornik trudov Kiyevsk. in-ta kinoinzhenerov, Issue 1, 194[illegible], p. 1[illegible]4- 5.

So: [illegible], 1[illegible] April [illegible], (Letopis 'Zhurnal'nykh Statey, No. 1[illegible], 1949).

APPROVED FOR RELEASE: 06/13/2000 CIA-RDP86-00513R000720810016-6"

"APPROVED FOR RELEASE: 06/13/2000 CIA-RDP86-00513R000720810016-6

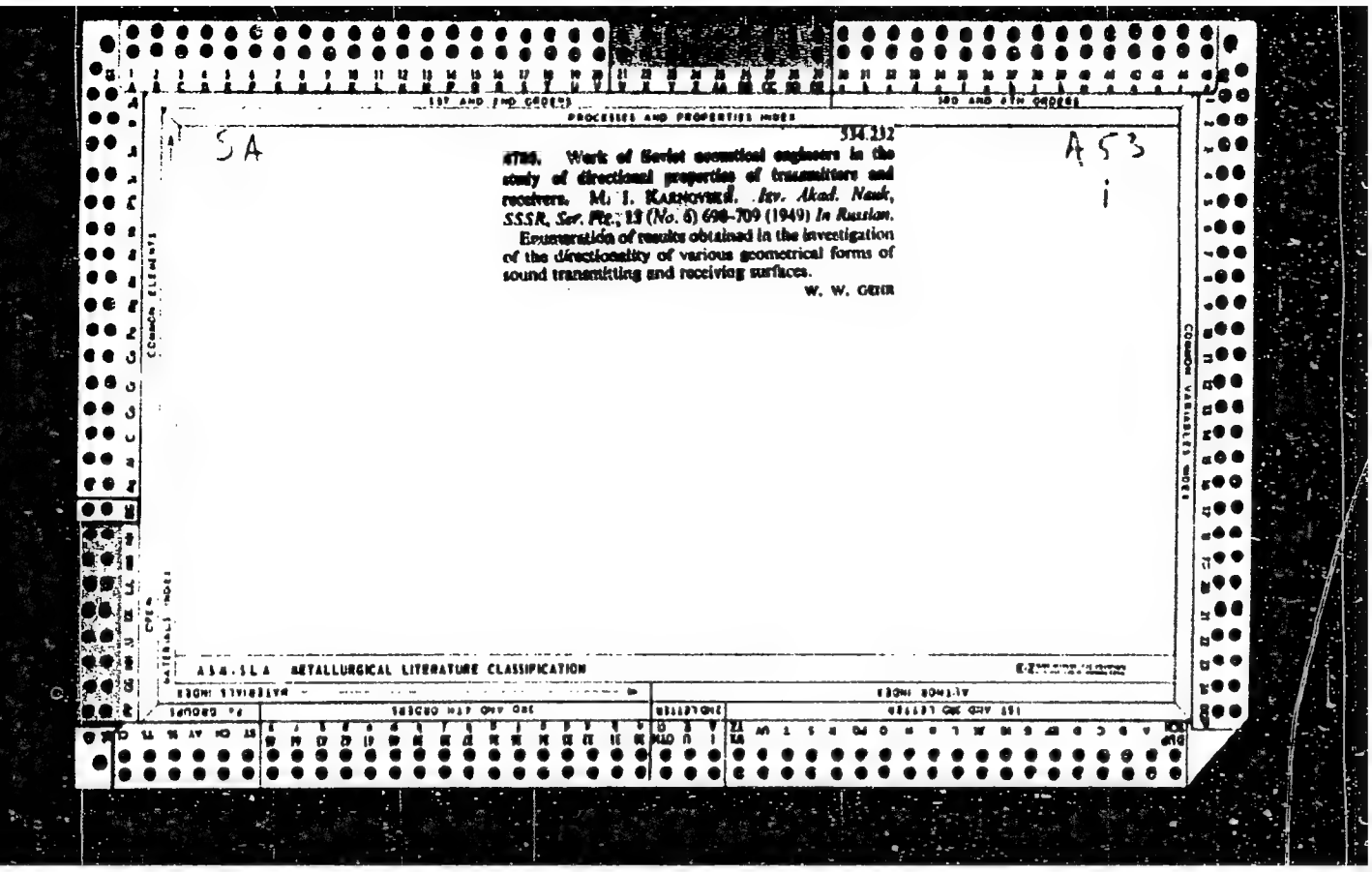

534.232

4786. **Work of Soviet acoustical engineers in the study of directional properties of transmitters and receivers.** M. I. KARNOVICH. *Izv. Akad. Nauk, SSSR, Ser. Fiz.*, 13 (No. 6) 698–709 (1949) *In Russian.*

Enumeration of results obtained in the investigation of the directionality of various geometrical forms of sound transmitting and receiving surfaces.

W. W. GEER

ASM-SLA METALLURGICAL LITERATURE CLASSIFICATION

APPROVED FOR RELEASE: 06/13/2000 CIA-RDP86-00513R000720810016-6"

"APPROVED FOR RELEASE: 06/13/2000 CIA-RDP86-00513R000720810016-6

KARNOVSKIY, M. I.

Problem of Energy Summation

The function of mutual correlations of potentials at the output of two oscillatory circuits, should a "white" noise act at the input, is computed. Formulas for additive distortions, caused by being mutually out of tune, are derived. (RZhFiz, No. 8, 1955) Sb. Tr. Kievsk. in-ta Kinoinzhenerov. No. 2, 1954, 3-8 .

SO: Sum. No. 744, 8 Dec 55 - Supplementary Survey of Soviet Scientific Abstracts (17)

APPROVED FOR RELEASE: 06/13/2000 CIA-RDP86-00513R000720810016-6"

"APPROVED FOR RELEASE: 06/13/2000 CIA-RDP86-00513R000720810016-6

KARNOVSKIY, M. I.

Equivalent Schemes of Primary Spherical Emitters

By introduction of mechanical resistance the real emitter is reduced to an equivalent circuit in which the concentrated force generates in the resistance an oscillatory velocity. (RZhFiz, No. 8, 1955) Sb. Tr. Kievsk. in-ta Kinoinzhenerov, No. 2, 1954, 23-26.

SO: Sum. No. 744, 8 Dec 55 - Supplementary Survey of Soviet Scientific Abstracts (17)

APPROVED FOR RELEASE: 06/13/2000 CIA-RDP86-00513R000720810016-6"

"APPROVED FOR RELEASE: 06/13/2000 CIA-RDP86-00513R000720810016-6

KARNOVSKIY, M. I.

USSR/Electronics - Reception FD-525

Card 1/1 : Pub. 90-1/13

Author : Karnovskiy, M. I., Active Member, VNORiE

Title : Suppression of fluctuation noise when using the correlation method of reception

Periodical : Radiotekhnika, 9, 3-11, May/Jun 1954

Abstract : Author calculates signal to noise ratio under correlation method of reception and compares it with the corresponding ratio at the output of a band pass filter. Four references: 3 USSR, 1 USA.

Institution : All-Union Scientific and Technical Society of Radio Engineering and Electric Communications imeni A. S. Popov (VNORiE)

Submitted : December 27, 1953

APPROVED FOR RELEASE: 06/13/2000 CIA-RDP86-00513R000720810016-6"

"APPROVED FOR RELEASE: 06/13/2000 CIA-RDP86-00513R000720810016-6

KARNOVSKIY, A. I.

"Frequency Characteristics of Certain Distributed Systems of Coherent Radiators".

Kiev Polytechnic Institute

A report delivered at a conference on Electro-acoustics held by the Acoustic Commission, the Acoustic Institute of the Academy of Sciences USSR, and the Kiev Order of Lenin Polytechnic Inst., from 1-5 1955 in Kiev.

SO: Sum 728, 28 Nov 1955.

APPROVED FOR RELEASE: 06/13/2000 CIA-RDP86-00513R000720810016-6"

"APPROVED FOR RELEASE: 06/13/2000 CIA-RDP86-00513R000720810016-6

KARNOVSKIY, M.I.

4936. DIRECTIONAL PROPERTIES OF SOUND DIFFUSING LENSES. L.N.Bondareva and M.I.Karnovskii. Akust. Zh., Vol. 1, No. 2, 126-33 (1955). In Russian. 534.25

Angular distributions are calculated of the sound pressures set up by plano-elliptical and plano-hyperbolic sound lenses for various values of refractive index, angular aperture and distance from the virtual focus of the lens. C.R.S.Manders

Kiev-Polytech-Inst.

APPROVED FOR RELEASE: 06/13/2000 CIA-RDP86-00513R000720810016-6"

"APPROVED FOR RELEASE: 06/13/2000 CIA-RDP86-00513R000720810016-6

BONDAREVA, L.N.; KARNOVSKIY, M.I.

Directional properties of scattering sound lenses. Trudy Kom po akust. 8:114-124 '55. (MLRA 8:8)

1. Kiyevskiy institut kinoinzhenerov.
(Sound lenses)

APPROVED FOR RELEASE: 06/13/2000 CIA-RDP86-00513R000720810016-6"

"APPROVED FOR RELEASE: 06/13/2000 CIA-RDP86-00513R000720810016-6

KARNOVSKIY, M. I.

Interference of complex signals. Trudy Kom po akust. 8:139-150 '55.
(MLRA 8:8)

1. Kiyevskiy institut kinoinzhenerov.
(Radio waves)

APPROVED FOR RELEASE: 06/13/2000 CIA-RDP86-00513R000720810016-6"

"APPROVED FOR RELEASE: 06/13/2000 CIA-RDP86-00513R000720810016-6

KARNOVSKIY, M. I.

Comparison of the suitability of white noise, multitone and wailing sounds for acoustic indoor measurements. Trudy Kom. po akust. 8:160-167 '55. (MLRA 8:8)

1. Kiyevskiy institut kinoinzhenerov
(Sound--Measurement) (Acoustics)

APPROVED FOR RELEASE: 06/13/2000 CIA-RDP86-00513R000720810016-6"

"APPROVED FOR RELEASE: 06/13/2000 CIA-RDP86-00513R000720810016-6

KARNOVSKIY, M. I.

"Calculation of Sirens".
Abstracted for inclusion in the Second International Congress on Acoustics, Cambridge, Mass., 17-24, Jun 1956

Central Research Institute, Leningrad

APPROVED FOR RELEASE: 06/13/2000 CIA-RDP86-00513R000720810016-6"

"APPROVED FOR RELEASE: 06/13/2000 CIA-RDP86-00513R000720810016-6

KARNOVSKIY, M.I.

Computing impedance in some acoustic distribution systems.
Akust. zhur. 2 no.3:267-278 Jl-S '56. (MLRA 9:12)

1. Kiyevskiy politekhnicheskiy institut.
(Sound waves)

APPROVED FOR RELEASE: 06/13/2000 CIA-RDP86-00513R000720810016-6"

"APPROVED FOR RELEASE: 06/13/2000 CIA-RDP86-00513R000720810016-6

Karnovskiy. M.I

PA - 2293

AUTHOR: KARNOVSKIY,M.I., CHAYKOVSKIY,V.I., Regular Members of the Society for Radiotechnology. (VNOR.E)

TITLE: The Method of Increasing the Immunity from Disturbance of the Autocorrelation Reception of Impulse Signals. (Metod povysheniya pomekhoustoychivosti avtokorrelyatsionnogo priyema impul'snykh signalov, Russian).

PERIODICAL: Radiotekhnika, 1957, Vol 12, Nr 2, pp 22-27 (U.S.S.R.)
Received: 4 / 1957 Reviewed: 4 / 1957

ABSTRACT: It is shown that, with the aid of a somewhat complicated construction of the correlation reception system, it is possible to eliminate the usual faults and to increase the immunity from disturbance of the system. (Usual faults: if time of delay is greater than the optimum time, the immunity from disturbance of autocorrelation reception decreases to zero if the time of delay becomes equal to the duration of the useful signal). This is attained by switching on a synchronous key-device into one of the channels of the system. The range of application is, however, limited by the class of the synchronous pulse systems. At first it is shown merely by approximation that the dispersion of the noise integral is diminished in the case of regenerative reception, and that therefore the immunity from disturbance increases in the case of the method suggested. This is proved with accuracy in the course of the second part of the paper. From the attached diagram it may be seen that a regenerative autocorrela-

Card 1/2

SUBMITTED: 1. 10. 1956
AVAILABLE: Library of Congress

Card 2/2

APPROVED FOR RELEASE: 06/13/2000 CIA-RDP86-00513R000720810016-

"APPROVED FOR RELEASE: 06/13/2000 CIA-RDP86-00513R000720810016-6

KARNOVSKIY, M. I.

BRESKARAVAYNYI, B. M., VOLF,, V. M., GORBENKO, V. S., KARNOVSKIY, M. I., SHOTSKIY, B. I. and TURYEV, A. A.

XXXXX "Wave Analysers and Spectrometers with Variable-Tuning Filters with Ferrite Cores."

fpx paper presented at the 4th All-Union Conf. on Acoustics, Moscow, 25 May - 1 Jun 58.

APPROVED FOR RELEASE: 06/13/2000 CIA-RDP86-00513R000720810016-6"

"APPROVED FOR RELEASE: 06/13/2000 CIA-RDP86-00513R000720810016-6

KARNOVSKIY, M.I.

Designing sirens. Izv. vys. ucheb. zav.; radiotekh. no.1:64-67 Ja-F '58. (MIRA 11:4)

1. Rekomendovana kafedroy akustiki i zvukozapisi Kiyevskogo ordena Lenina politekhnicheskogo instituta.
(Electroacoustics)

APPROVED FOR RELEASE: 06/13/2000 CIA-RDP86-00513R000720810016-6"

"APPROVED FOR RELEASE: 06/13/2000 CIA-RDP86-00513R000720810016-6

SOV/46-5-1-4/24

AUTHORS: Vollerner, N.F. and Karnovskiy, M.I.

TITLE: On Calculation of the Concentration Coefficient of Certain Directive Acoustical Systems (K raschetu koeffitsiyenta kontsentratsii nekotorykh napravlennykh akusticheskikh sistem)

PERIODICAL: Akusticheskiy Zhurnal, 1959, Vol 5, Nr 1, pp 25-30 (USSR)

ABSTRACT: Relationships between the coefficient of axial concentration and the coefficient of pressure amplification of acoustical systems possessing directivity, make it possible to calculate one of these coefficients when the other is known. Such relationships are very useful when direct calculation of one of these coefficients is considerably easier. The authors derive these relationships for axi-symmetrical parabolic and cylindrical concentrators. The paper is entirely theoretical. There are 3 figures and 7 references, 6 of which are Soviet and 1 German.

ASSOCIATION: Kiyevskiy politekhnicheskiy institut (Kiyev Polytechnical Institute)

SUBMITTED: December 10, 1957

Card 1/1

APPROVED FOR RELEASE: 06/13/2000 CIA-RDP86-00513R000720810016-6"

"APPROVED FOR RELEASE: 06/13/2000 CIA-RDP86-00513R000720810016-6

S/142/60/000/003/005/017
E192/E482

6.9000

AUTHOR: Karnovskiy, M.I.

TITLE: Determination of the Power Spectrum Density of Real Random Stationary Processes

PERIODICAL: Izvestiya vysshikh uchebnykh zavedeniy, Radiotekhnika, 1960, No.3, pp.337-341

TEXT: The investigation of random stationary processes is often based on the use of the concept of the spectral power density $g(\omega)$ of the process, which is determined for the positive as well as the negative frequencies. However, since the spectrum density $g(\omega)$ for real stationary random processes is an even function of frequency, it is sufficient for these processes to give the spectrum density only for the positive frequencies. Now, the spectral power density $F(\omega)$ is understood as a quantity (Ref.1) which is equal to twice $g(\omega)$ for $\omega > 0$ and which is not determined for negative frequencies. $F(\omega)$ can be represented by

$$\left.\begin{aligned} F(\omega) &= 2g(\omega) \quad \text{at} \quad \omega \geqslant 0 \\ F(\omega) &= 0 \quad \text{at} \quad \omega < 0 \end{aligned}\right\} \qquad (1)$$

Card 1/4

APPROVED FOR RELEASE: 06/13/2000 CIA-RDP86-00513R000720810016-6"

"APPROVED FOR RELEASE: 06/13/2000 CIA-RDP86-00513R000720810016-6

Determination of the Power Spectrum Density of Real Random Stationary Processes

Unfortunately, it is not often sufficiently stressed (Ref.2 and 3) that $g(\omega)$ and $F(\omega)$ are not identical and this often leads to confusion. The spectral power density $g(\omega)$ and the correlation function $B(\tau)$ of a stationary random process are related by

$$B(\tau) = \int_{-\infty}^{\infty} g(\omega) e^{j\omega\tau} \, d\omega \qquad (2)$$

$$g(\omega) = \frac{1}{2\pi} \int_{-\infty}^{\infty} B(\tau) e^{-j\omega\tau} \, d\tau \qquad (3)$$

where $g(\omega)$ exists for the values of ω extending from $-\infty$ to $+\infty$. However, since $g(\omega)$ and $B(\tau)$ are even functions, Eq.(2) and (3) can be written as Eq.(4) and (5); the

APPROVED FOR RELEASE: 06/13/2000 CIA-RDP86-00513R000720810016-6"

"APPROVED FOR RELEASE: 06/13/2000 CIA-RDP86-00513R000720810016-6

Determination of the Power Spectrum Density of Real Random Stationary Processes

relationship between $B(\tau)$ and $F(\omega)$ are therefore defined by Eq.(6) and (7). In the above formulas $g(\omega)$ and $F(\omega)$ determine the spectrum density relative to a frequency bandwidth $\Delta\omega = 1$. By referring these densities to the frequency bandwidth $\Delta f = 1$, new spectral densities $g_1(\omega)$ and $f_1(\omega)$ are obtained. These are defined by Eq.(8). Further formulas which follow from this definition are given by Eq.(10), (11), (12) and (13). The use of Eq.(7) or (13) which may lead to certain complications is illustrated by an example. It is assumed that the correlation function is given by Eq.(14). From Eq.(13) it follows that $F_1(\omega)$ is in the form of Eq.(15) where δ denotes the δ-function. It is seen that Eq.(15) contains two components, one of which has a negative frequency. The result is therefore unsatisfactory, since $F_1(\omega)$ is defined only for positive ω. The difficulty is overcome by determining $g_1(\omega)$. This is given by Eq.(17). Consequently, $F_1(\omega)$ is defined by Eq.(18) which gives the correct result. Another example is represented by the correlation

APPROVED FOR RELEASE: 06/13/2000 CIA-RDP86-00513R000720810016-6"

"APPROVED FOR RELEASE: 06/13/2000 CIA-RDP86-00513R000720810016-6

S/142/60/000/003/005/017
E192/E482

Determination of the Power Spectrum Density of Real Random Stationary Processes

function given by Eq.(19). From Eq.(13) it is found that $F_1(\omega)$ is in the form of Eq.(20). Again this result is unsatisfactory and it is preferable to employ Eq.(11). This shows that $g_1(\omega)$ is expressed by Eq.(21) and consequently $F_1(\omega)$ is expressed by Eq.(24). There are 1 figure and 3 Soviet references.

ASSOCIATION: Kafedra akustiki i zvukotekhniki Kiyevskogo ordena Lenina politekhnicheskogo instituta
(Department of Acoustics and Sound Engineering of Kiyev "Order-of-Lenin" Polytechnical Institute)

SUBMITTED: July 3, 1959

Card 4/4

APPROVED FOR RELEASE: 06/13/2000 CIA-RDP86-00513R000720810016-6"

"APPROVED FOR RELEASE: 06/13/2000 CIA-RDP86-00513R000720810016-6

KARNOVSKIY, M.I.

83154

S/108/60/015/009/006/008
B002/B067

9.2550

AUTHORS: Beskorovaynyy, B. M., Vol'f, V. M., Gorbenko, V. S., Karnovskiy, M. I., Shotskiy, B. I., Yur'yev, A. A., Members of the Society

TITLE: Ferrite Filters With Variable Adjustment

PERIODICAL: Radiotekhnika, 1960, Vol. 15, No. 9, pp. 57-63

TEXT: In 1958, analyzers and spectrometers for frequencies of the sound-wave range were developed at the kafedra akustiki i zvukotekhniki Kiyevskogo politekhnicheskogo instituta (Chair of Acoustics and Sound Engineering of the Kiyev Polytechnic Institute) in which ferrite filters with variable adjustment are used. Besides, also ferrite filters with variable adjustment were developed, which operate in the range of up to 120 kc/s. In the present paper, the following is discussed: Selection of material and shape of the core; working conditions of the *magnitoprovod; nonlinearity of the characteristics of ferrite cores and selection of the input signal; temperature compensation; transients in ferrite filters. The analyzer developed at the aforementioned institute has the following

* magnetic circuit

Card 1/2

APPROVED FOR RELEASE: 06/13/2000 CIA-RDP86-00513R000720810016-6"

"APPROVED FOR RELEASE: 06/13/2000 CIA-RDP86-00513R000720810016-6

GERANIN, V.A.; ZARENIN, Yu.G.; KARNOVSKIY, M.I.

Redistribution of signal probabilities in information transmitting and processing systems. Izv. vys. ucheb. zav.; radiotekh. 5 no.3:339-346 My-Je '62. (MIRA 15:9)

1. Rekomendovana kafedroy akustiki i zvukotekhniki Kiyevskogo ordena Lenina politekhnicheskogo instituta.
(Radio)
(Information theory)

APPROVED FOR RELEASE: 06/13/2000 CIA-RDP86-00513R000720810016-6"

"APPROVED FOR RELEASE: 06/13/2000 CIA-RDP86-00513R000720810016-6

GERANIN, V.A.; KARNOVSKIY, M.I.

Concerning some reversible conversions linked with a spectral representation of determined processes. Izv. vys. ucheb. zav.; radiotekh. 5 no.4:464-468 Jl-Ag '62. (MIRA 16:6)

1. Rekomendovana kafedroy akustiki i zvukotekhniki Kiyevskogo ordena Lenina politekhnicheskogo instituta.
(Radio) (Information theory)

APPROVED FOR RELEASE: 06/13/2000 CIA-RDP86-00513R000720810016-6"

"APPROVED FOR RELEASE: 06/13/2000 CIA-RDP86-00513R000720810016-6

33786
S/108/62/017/002/001/010
D201/D305

6.9210

AUTHORS: Vollerner, N.F., Gatkin, N.G., and Karnovskiy, M.I., Members of the Society (see Association)

TITLE: Interference-killing properties of a receiver producing a combination of readings of an autocorrelation function

PERIODICAL: Radiotekhnika, v. 17, no. 2, 1962, 3 - 9

TEXT: The authors show that in a correlation arrangement, in which the signal $U_{out.s}(T)$ at the output is formed by combined readings of autocorrelation functions, taken with certain weighting factors A_i, it is possible to achieve additional improvement in the S/N ratio. The signal at the integrator output in this case has the form

$$U_{out.s}(T) = \sum_{i=0}^{n} A_i \frac{1}{T} \int_0^T U_c(t)U_c(t - \tau_i)dt. \qquad (1)$$

Card 1/5

APPROVED FOR RELEASE: 06/13/2000 CIA-RDP86-00513R000720810016-6"

"APPROVED FOR RELEASE: 06/13/2000 CIA-RDP86-00513R000720810016-6

Fig. 1 shows the block diagram of the correlation arrangement according to (1). The mixed pulse signal and fluctuating interference, after the Π-shaped frequency response filter with pass band $\Delta f \gg \tau_p$ (where τ_p is the pulse duration) is applied to a multiplier. The sum of mixed signals, passed through n-changes is applied to the second input of the amplifier, every channel delays the signal by time

$$\tau_i = i\tau_1 \qquad i = 0, 1, 2, \ldots, n \qquad (2)$$

where

$$\tau_1 = \frac{1}{\Delta f} . \qquad (3)$$

It is shown that the circuit of Fig. 1 has the output signal according to (1) and it is shown that at any $i \neq 0$, as determined by relationships (2) and (3), the dispersion of noise is determined by

$$D\left\{U_n(t)U_n(t - \tau_i)\right\} \leq \frac{1}{2} D\left\{U_n^2(t)\right\}. \qquad (13)$$

the following deduction are also made: The derivation of (13) proves that the character of power frequency spectra of fluctuations

APPROVED FOR RELEASE: 06/13/2000 CIA-RDP86-00513R000720810016-6"

"APPROVED FOR RELEASE: 06/13/2000 CIA-RDP86-00513R000720810016-6

Interference-killing properties ...

of the process is $u_n^2(t)$ and $U_n(t)U_n(t - \tau_i)$ is practically the same. It follows that for any i the magnitude of the coefficient k_i, relating the dispersion of noise at the input and output of the integrator, is independent of i and, therefore,

$$k_i = k \qquad (20)$$

and that the intensity of power spectrum fluctuation of the process $u_n^2(t)$ is approximately twice that of the process $u_n(t)u_n(t-\tau)$. It follows from (13) and (20) that the signal-to-noise ratio at the output $(S/N)_{out}$ is directly proportional to $\Psi(M_i, m_i)$ as given by

$$\Psi(M_i, m_i) = \frac{1 + \sum_{i=1}^{n} M_i m_i}{\sqrt{1 + \frac{1}{2}\sum_{i=1}^{n} M_i^2}}, \qquad (23)$$

where $M_i = \frac{A_i}{A_o}$ and $m_i = \frac{\tau_p - i\tau_1}{\tau_p}$ and maximum improvement is obtained

Card 3/5

APPROVED FOR RELEASE: 06/13/2000 CIA-RDP86-00513R000720810016-6"

"APPROVED FOR RELEASE: 06/13/2000 CIA-RDP86-00513R000720810016-6

Interference-killing properties ...

for maximum of function Ψ, so that the problem of determining the weighting factors A_i reduces to determining i partial derivatives of $\Psi(M_i, m_i)$ with respect to M_k and equating them to zero which leads to a recurrent expression for the optimum values of weighting factors as given by

$$N_\kappa = \frac{m_\kappa \sum_{i=1,\, i\neq\kappa}^{n} N_i^2}{\sum_{i=1,\, i\neq\kappa}^{n} N_i m_i} \qquad (30)$$

where $N_i = A_i/A_1$. There are 4 figures and 6 references: 5 Soviet-bloc and 1 non-Soviet-bloc. The reference to the English-language publication reads as follows: Schwartz. Commun. a. elect., no. 23, 1956.

ASSOCIATION: Nauchno-tekhnicheskoye obshchestvo radiotekhniki i elektrosvyazi im. A.S. Popova (Scientific and Technical Society of Radio Engineering and Electrical Communications imeni A.S. Popov)

Card 4/5

APPROVED FOR RELEASE: 06/13/2000 CIA-RDP86-00513R000720810016-6"

"APPROVED FOR RELEASE: 06/13/2000 CIA-RDP86-00513R000720810016-6

Interference-killing properties ...

[Abstractor's note: Name of Association taken from first page of journal]

SUBMITTED: April 28, 1961

Fig. 1.

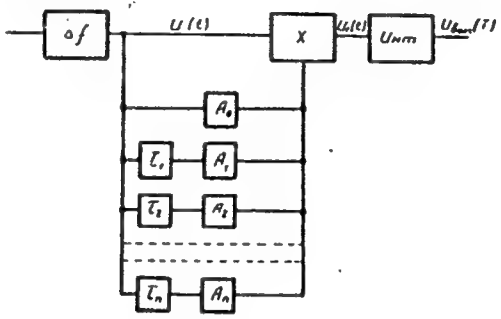

Рис. 1

Card 5/5

APPROVED FOR RELEASE: 06/13/2000 CIA-RDP86-00513R000720810016-6"

"APPROVED FOR RELEASE: 06/13/2000 CIA-RDP86-00513R000720810016-6

L 24509-65 EWT(d)/FSS-2/EEC(k)-2/EEC-4/EEC(t) Pn-4/Po-4/Pr-4/Pq-4/Ps-4/Pk-4/
Pl-4/Pac-4
AM4022013 BOOK EXPLOITATION S/611

Gatkin, Natan Grigor'yevich (Candidate of Technical Sciences); Geranin, Vsevolod Aleksandrovich (Candidate of Technical Sciences); Karnevskiy, Mark Il'ich (Doctor of Technical Sciences)

Integrators in measuring systems (Integratory* v sistemakh izmeraniya) Kiev, Gostekhizdat USSR, 1963. 138 p. illus., biblio. Errata slip inserted. 2400 copies printed. Reviewer: Zarenin, Yu. G. (Candidate of Technical Sciences); Managing editor: Pisarenko, M. G. (Engineer); Editor: Skubchenko, S. A. (Engineer); Technical editor: Berezavy*y, V. N.; Proofreader: Fialova, L. A.

TOPIC TAGS: integrator, measuring system, radio engineering, automation, telemechanization, radiometry, band filter, detector, low frequency filter, fluctuation noise, ideal integrator, ideal characteristic integrator, commutator RC circuit

PURPOSE AND COVERAGE: This book is intended for scientists and technicians working in the fields of radio engineering, automation, telemechanization, and radiometry, and may be of use also to senior students in the corresponding speciali-

Card 1/3

APPROVED FOR RELEASE: 06/13/2000 CIA-RDP86-00513R000720810016-6"

"APPROVED FOR RELEASE: 06/13/2000 CIA-RDP86-00513R000720810016-6

L 24509-65
AM4022013

2

zations. The operation of the typical radio-engineering track of a band filter - inertialess detector - low-frequency filter under conditions of measuring dispersion, the mean-square deviation of fluctuation noise, and the observation of signals (noise and determined) on a background of fluctuation static is analyzed. Special attention is paid to comparative evaluation of the effectiveness of different variations of a low-frequency filter: an ideal integrator, an ideal characteristic integrator, and a commutator RC-circuit. The authors express their gratitude to V. G. Lozovik, Assistant in the Kafedra Matematicheskoy Fiziki of the Kiyevskiy Politekhnicheskiy Institut.

TABLE OF CONTENTS:

Introduction - - 3
Ch. I. Transient and frequency characteristics of an ideal integrator, an ideal characteristic integrator, and a commutator RC-circuit - - 8
Ch. II. Fundamentals of analysis of the operation of the track of a band filter - detector - low-frequency filter - - 24

Card 2/3

APPROVED FOR RELEASE: 06/13/2000 CIA-RDP86-00513R000720810016-6"

"APPROVED FOR RELEASE: 06/13/2000 CIA-RDP86-00513R000720810016-6

L 24509-65
AM4022013

Ch. III. Relative errors in measurement of dispersion and mean-square deviation of fluctuation noise -- 50
Ch. IV. Signal-to-noise ratio in the observation of noise and determined signals on a background of fluctuation noise -- 70
Ch. V. Some remarks apropos of the practical achievement of post-detector filtration -- 94
Appendixes -- 112
Basic definitions -- 134
Indexes -- 135
Literature -- 137

SUB CODE: EC SUBMITTED: 26Jul63 NR REF SOV: 016

OTHER: 001

Card 3/3

APPROVED FOR RELEASE: 06/13/2000 CIA-RDP86-00513R000720810016-6"

"APPROVED FOR RELEASE: 06/13/2000 CIA-RDP86-00513R000720810016-6

L 6884-65 EWT(1) ASD(a)-5/ASD(f)/AFETR/ESD(c)/ESD(gs)/ESD(t)/RAEM(t)
ACCESSION NR: AP4044615 S/0046/64/010/003/0313/0317

52
47

AUTHORS: Karnovskiy, M. I.; Lozovik, V. G.

TITLE: Acoustic field of infinite round circular radiator under mixed boundary conditions on its surface

SOURCE: Akusticheskiy zhurnal, v. 10, no. 3, 1964, 313-317

TOPIC TAGS: wave equation, harmonic oscillation, acoustic field, boundary condition, acoustic radiation

ABSTRACT: An acoustic field is considered, excited by an infinite circular cylinder in an unbounded homogeneous medium exterior to that cylinder. Part of the cylinder surface, bounded by two generatrices, is assumed to be soft, and on the remaining part there is specified the radial velocity, which depends only on the polar angle. The problem reduces to a solution of the plane problem for the region exterior to the circle, and is formulated mathematically as the

Card 1/2

APPROVED FOR RELEASE: 06/13/2000 CIA-RDP86-00513R000720810016-6"

"APPROVED FOR RELEASE: 06/13/2000 CIA-RDP86-00513R000720810016-6

L 6884-65

ACCESSION NR: AP4044615

problem of determining a twice-continuously-differentiable solution of the wave equation for harmonic oscillations satisfying certain mixed boundary conditions. The solution is obtained by a standard technique of series expansion in Hankel and Bessel functions. "The authors thank Yu. L. Daletskiy, F. T. Baranovskiy, and O. M. Kozlov for discussions contributing to the performance of the present work." Orig. art. has: 22 formulas.

ASSOCIATION: Kiyevskiy politekhnicheskiy institut (Kiev Polytechnic Institute)

SUBMITTED: 07Jul63 ENCL: 00

SUB CODE: GP NR REF SOV: 000 OTHER: 001

Card 2/2

APPROVED FOR RELEASE: 06/13/2000 CIA-RDP86-00513R000720810016-6"

"APPROVED FOR RELEASE: 06/13/2000 CIA-RDP86-00513R000720810016-6

VOL'F, V.N.; GATKIN, N.G.; GERANIN, V.A.; KARNOVSKIY, M.I.

Interference rejection of a receiving channel "band filter - detector - lower frequencies filter - threshold device." Izv.vys.ucheb.zav.; radiotekh. 8 no.4:404-410 Jl-Ag '65. (MIRA 18:11)

1. Submitted May 7, 1964.

APPROVED FOR RELEASE: 06/13/2000 CIA-RDP86-00513R000720810016-6"

"APPROVED FOR RELEASE: 06/13/2000 CIA-RDP86-00513R000720810016-6

L 5093-66 EWT(d)/FSS-2

ACCESSION NR: AP5020119 UR/0109/65/010/008/1418/1425
621.391.14

AUTHOR: Gatkin, N. G.; Geranin, V. A.; Karnovskiy, M. I.; Krasnyy, L. G.; Cherney, N. I. 44 44 44 44 44

TITLE: Probability density of the derived phase of a modulated signal combined with a Gaussian noise

SOURCE: Radiotekhnika i elektronika, v. 10, no. 8, 1965, 1418-1425 48 B

TOPIC TAGS: signal detection 4, 44

ABSTRACT: This formula has been developed for a single-variable density of probability of the derived phase of a combination that comprises an amplitude-and-angle-modulated radio signal and a Gaussian noise:

$$W_1(0)=\frac{1}{16\pi B\rho\sqrt{\rho\delta_1}}\exp\left(K+\frac{\lambda_2+\nu_2}{2}\right)\left\{(\lambda_1+\nu_1)I_0\left[\frac{1}{2}\sqrt{\mu_2^2+(\lambda_2-\nu_2)^2}\right]+\right.$$
$$\left.+\frac{\mu_1\mu_2+(\lambda_1-\nu_1)(\lambda_2-\nu_2)}{\sqrt{\mu_2^2+(\lambda_2-\nu_2)^2}}I_1\left[\frac{1}{2}\sqrt{\mu_2^2+(\lambda_2-\nu_2)^2}\right]\right\}. \quad (28)$$

Card 1/2

0901 0699

APPROVED FOR RELEASE: 06/13/2000 CIA-RDP86-00513R000720810016-6"

"APPROVED FOR RELEASE: 06/13/2000 CIA-RDP86-00513R000720810016-6

L 5093-66

ACCESSION NR: AP5020119

The formula allows for the stagger between the signal carrier frequency and the frequency ω_0 corresponding to the maximum spectral density of the noise average power $F(\omega)$; it also allows for the asymmetry between $F(\omega)$ and ω_0. The formula encompasses all particular cases dealt with earlier in various publications (S. O. Rice, BSTJ, 1948, v. 27, p. 109; D. Middleton, J. Appl. Phys., 1948, v. 19, p. 817). Curves are supplied which correspond to a linear FM of the signal. Orig. art. has: 7 figures and 49 formulas.

ASSOCIATION: none

SUBMITTED: 01Jun64 ENCL: 00 SUB CODE: EC

NO REF SOV: 003 OTHER: 002

Card 2/2 nd

APPROVED FOR RELEASE: 06/13/2000 CIA-RDP86-00513R000720810016-6"

"APPROVED FOR RELEASE: 06/13/2000 CIA-RDP86-00513R000720810016-6

[illegible]

"[illegible]"

[illegible]

[illegible]

[illegible]

APPROVED FOR RELEASE: 06/13/2000 CIA-RDP86-00513R000720810016-6"

"APPROVED FOR RELEASE: 06/13/2000 CIA-RDP86-00513R000720810016-6

Z/057/62/000/003/001/002
I037/1237

AUTHOR: Karnovský, Miloš

TITLE: Nitridation of ferrous alloys

JOURNAL: Hutník, no. 3, 1962, 120–124

TEXT: An attempt was made to replace all or part of the nickel in stainless steel by nitridification of the chrome and the manganese in the steel. Both elements tend to form a series of nitrides e.g., MnN, Mn_3N_2, Mn_2N, Mn_5N_2, Mn_7N_2, Mn_4N, CrN, Cr_2N. Experiments in nitridification in the solid and liquid state, and aluminothermic nitridification were carried out. The best results were obtained in the solid state nitridification. The grain size of the ground metal had to be below 1.5 mm. With manganese, iron-manganese alloy and iron-chrome alloy, nitridification of over 5% has been obtained at 900°C–1000°C., using gaseous N_2 at up to 2 atmospheres. Nitridification in liquid state only gave satisfactory results with pure chrome; in other cases very low nitridifications only were obtained. At aluminothermic nitridification, presumably because of the high temperature, no satisfactory results have been obtained. By remelting, a large part and, in some cases, even the major part of nitrogen is lost. This can partly be avoided by working in a nitrogen atmosphere. There are 8 figures, and 5 tables.

ASSOCIATION: Výzkumný ústav hutnictví železa (Research Institute for Iron Mining) Prague

Card 1/1

APPROVED FOR RELEASE: 06/13/2000 CIA-RDP86-00513R000720810016-6"

"APPROVED FOR RELEASE: 06/13/2000 CIA-RDP86-00513R000720810016-6

L 3113-66 EWP(t)/EWP(b) IJP(c) JD

ACCESSION NR: AP5026881 CZ/0034/65/000/006/0394/0400

AUTHOR: Cervinka, Milos (Engineer); Karnovsky, Milos (Engineer)

TITLE: Ways of refining ferro-silicon

SOURCE: Hutnicke listy, no. 6, 1965, 394-400

TOPIC TAGS: ferroalloy, silicon, metal melting

ABSTRACT: Nitrogen is not a suitable agent for refining ferro-silicon, as it does not remove Al; fluorspar, air, and quartz sand behave in a similar way. Very large amounts of these agents would be required to remove limited amounts of aluminum, and substantial deposits would form in the metal. Oxygen, when used, burns off too large amounts of silicon. Limestone and Mg compound are the most promising agents. At present the most frequently used agents are: Cl, CO_2, synthetic slags, acid lining of the furnaces, and the so-called combined technique.
Orig. art. has: 9 tables, 6 graphs, 1 figure.

ASSOCIATION: VUHZ, Prague

SUBMITTED: 00 ENCL: 00 SUB CODE: MM

NR REF SOV: 008 OTHER: 015 JPRS

Card 1/1 PC

APPROVED FOR RELEASE: 06/13/2000 CIA-RDP86-00513R000720810016-6"

"APPROVED FOR RELEASE: 06/13/2000 CIA-RDP86-00513R000720810016-6

UCHITEL', I.Ya., KHAZMAN, E.L.; KARNOZ, G.V.

Role of endogenic pyrogen in immunogenesis. Report No.1: Effect of endogenic pyrogen on the formation of antibodies and the intensity of protein synthesis in the body. Zhur. mikrobiol., epid. i immun. 42 no.10:3-7 O '65.

(MIRA 18:11)

1. Institut epidemiologii i mikrobiologii imeni Gamalei AMN SSSR, Moskva. Submitted September 3, 1964.

APPROVED FOR RELEASE: 06/13/2000 CIA-RDP86-00513R000720810016-6"

"APPROVED FOR RELEASE: 06/13/2000 CIA-RDP86-00513R000720810016-6

KARNOZHITSKIY, N.

B

BULGARIA/General Biology - General Ecology.

Abs Jour : Ref Zhur Biol., No 6, 1959, 23699

Author : Karnozhitskiy, N.

Inst : Soil Institute

Title : Insects - Soil Formers in Salted Soils Along the Shores of Varnensky Lake.

Orig Pub : Izv. Pochv. in-t, Bolg. AN, 1957, 4, 191-201

Abstract : The salted soils which were studied are the bottom of a former lake, which was recently dried out by the digging of a canal to the sea. The eastern winds drove sea water into the lake and the soil of the former bottom became salty. These areas were grown over by halophytes, especially by glasswort. The most important soil formers are two species; Bledius spectabilis beetle and mile cricket. The beebles burrow vertical tunnels up to the level of

Card 1/2

APPROVED FOR RELEASE: 06/13/2000 CIA-RDP86-00513R000720810016-6"